MERLO

P 50.18 HM

- MAXIMUM LOAD CAPACITY: 12,000 LBS
- MAXIMUM LIFT HEIGHT: 58’ 7”
- MAXIMUM REACH: 42’ 3”
- LOAD CAPACITY AT MAXIMUM LIFT HEIGHT: 6,600 LBS
- LOAD CAPACITY AT MAXIMUM FORWARD REACH: 1,100 LBS

AMS-Merlo.com 1205 Galleria Blvd., Rock Hill, SC 29730 803-327-4949

SPECIFICATIONS: P 50.18 HM

Power / 6 Cylinder Turbo Diesel	Iveco / 170 HP
Transmission	2 Speed / Hydrostatic
Maximum Speed	25 MPH
Total Unladen Mass	34,610 LBS
Boom Sideshift	Standard / 1’-6”
Frame Leveling	Standard / ±8%
Load Sensing Hydraulic Pump (PSI-gal/min)	3,340-38
Fuel Capacity	48.8 Gallons
Hydraulic Oil Capacity	32 Gallons
Tires	17.5/25
Turning Radius	14’-2”
4 Wheel Drive / 3 Steering Modes	Standard
Control and Command System	Electronic MERlin

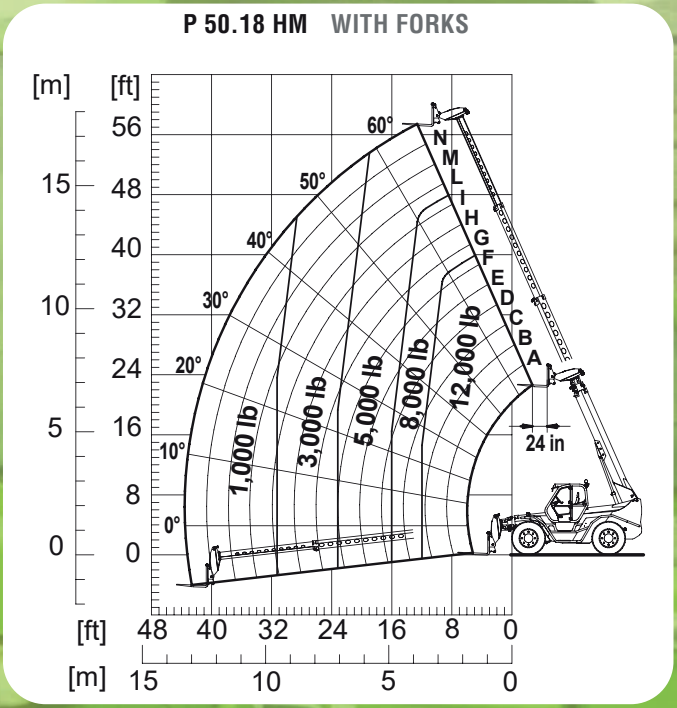

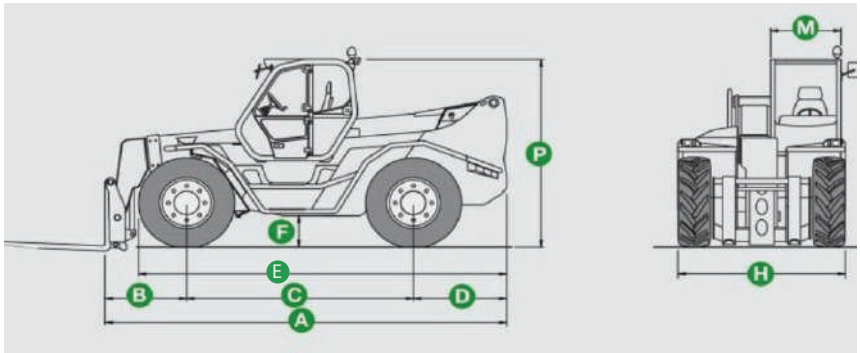

Dimensions					
A	20’-2”	D	1’-6”	H	7’-10”
B	5’-1”	E	7’-10”	M	3’-3”
C	10’-7”	F	1’-10”	P	9’-4”

DEALER INFORMATION: