MERLO

P 38.13 US STABILIZERS

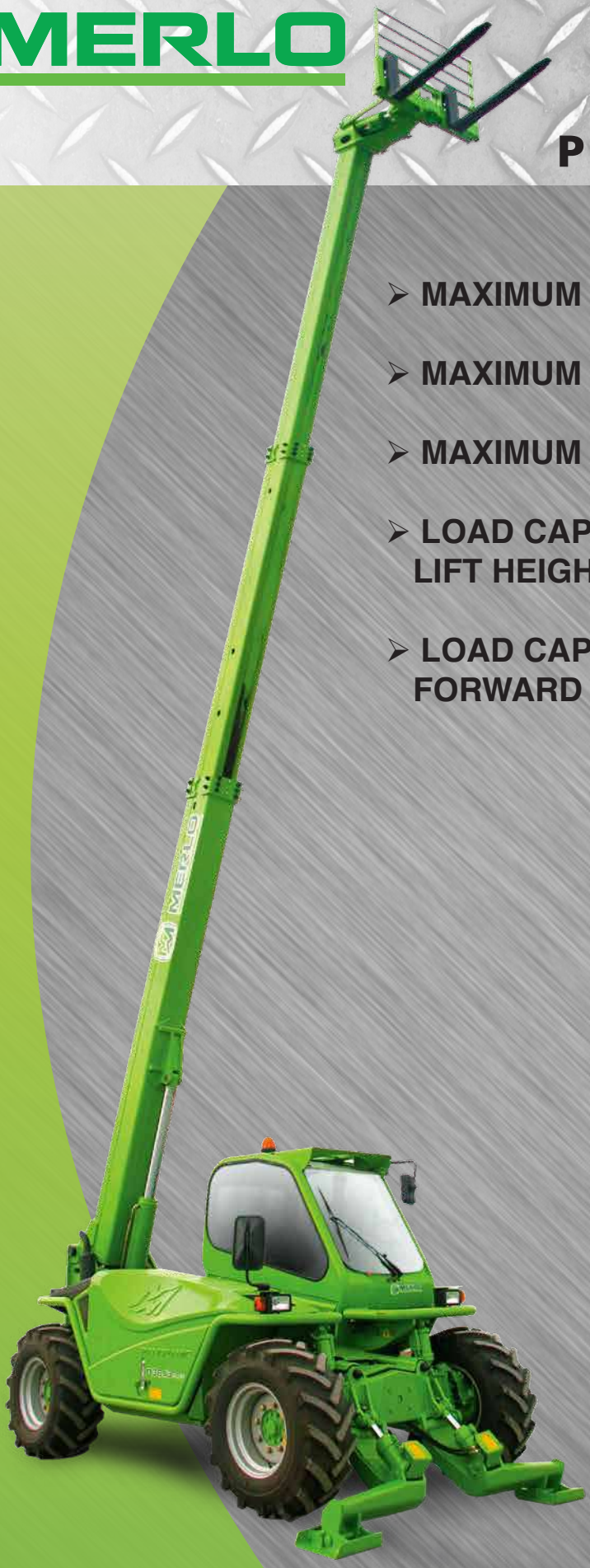

- MAXIMUM LOAD CAPACITY: 8,300 LBS
- MAXIMUM LIFT HEIGHT: 41’ 3”
- MAXIMUM REACH: 28’ 5”
- LOAD CAPACITY AT MAXIMUM LIFT HEIGHT: 7,700 LBS
- LOAD CAPACITY AT MAXIMUM FORWARD REACH: 1,700 LBS

AMS-Merlo.com 1205 Galleria Blvd., Rock Hill, SC 29730 803-327-4949

SPECIFICATIONS:
P 38.13 US STABILIZERS

Power / 4 Cylinder Turbo Diesel	Deutz/101 HP
Transmission	2 Speed /Hydrostatic
Maximum Speed	25 MPH
Total Unladen Mass	19,070 LBS
Boom Side Shift (Inches)	Standard / 13
Frame Leveling	Standard / ±10%
Load Sensing Hydraulic Pump (PSI - gal/min)	3,045-38
Fuel Capacity	40 Gallons
Hydraulic Oil Capacity	28 Gallons
Tires	405/70-20
4 Wheel Drive / 3 Steering Modes	Standard
Hydraulic System	Load-Sensing
Independent Front Stabilizers	Standard

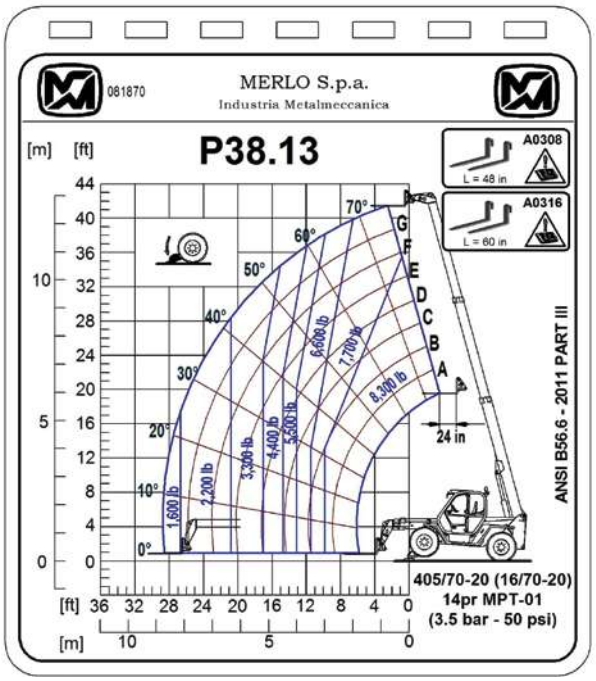

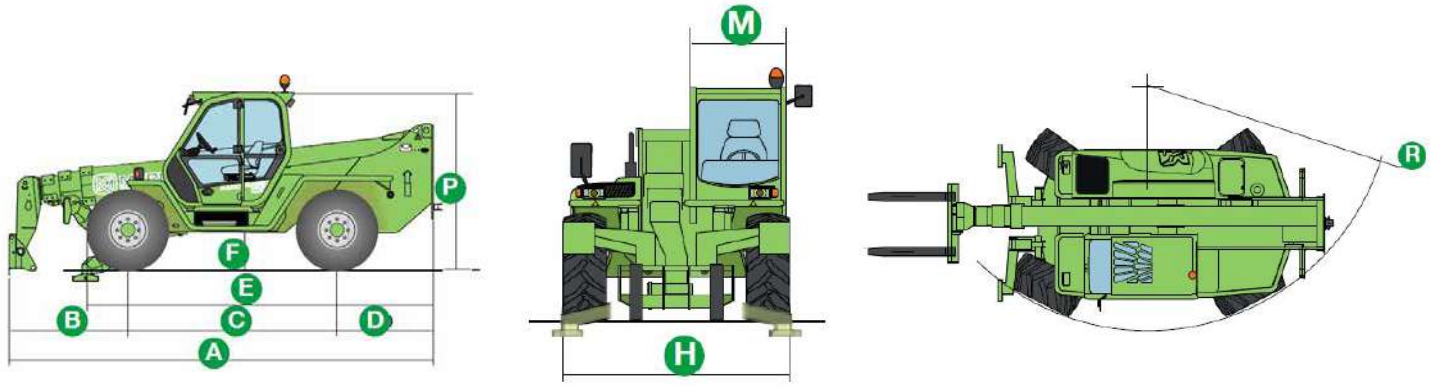

Dimensions							
A	17’ -2”	D	2’-7”	H	7’-3”	R	12’-7”
B	5’-5”	E	13’-5”	M	3’-3”		
C	9’-0”	F	1’-6”	P	8’-0”		

DEALER INFORMATION: